PARTS LIST

2020.08.18

www.nilfisk.com

Nilfisk

TABLE OF CONTENTS

GENERAL VIEW 1
ACCESSORIES 3
COVER AND TANKS 5
FRAME SYSTEM 7
HANDLE SUPPORT SYSTEM 9
HANDLE SYSTEM 11
MOTOR AND DECK SYSTEM 13
BRUSH DECK SYSTEM 15
WIRING DIAGRAM 17
RECOMMENDED SPARE PARTS 19
OPTIONALS AND ACCESSORIES 21

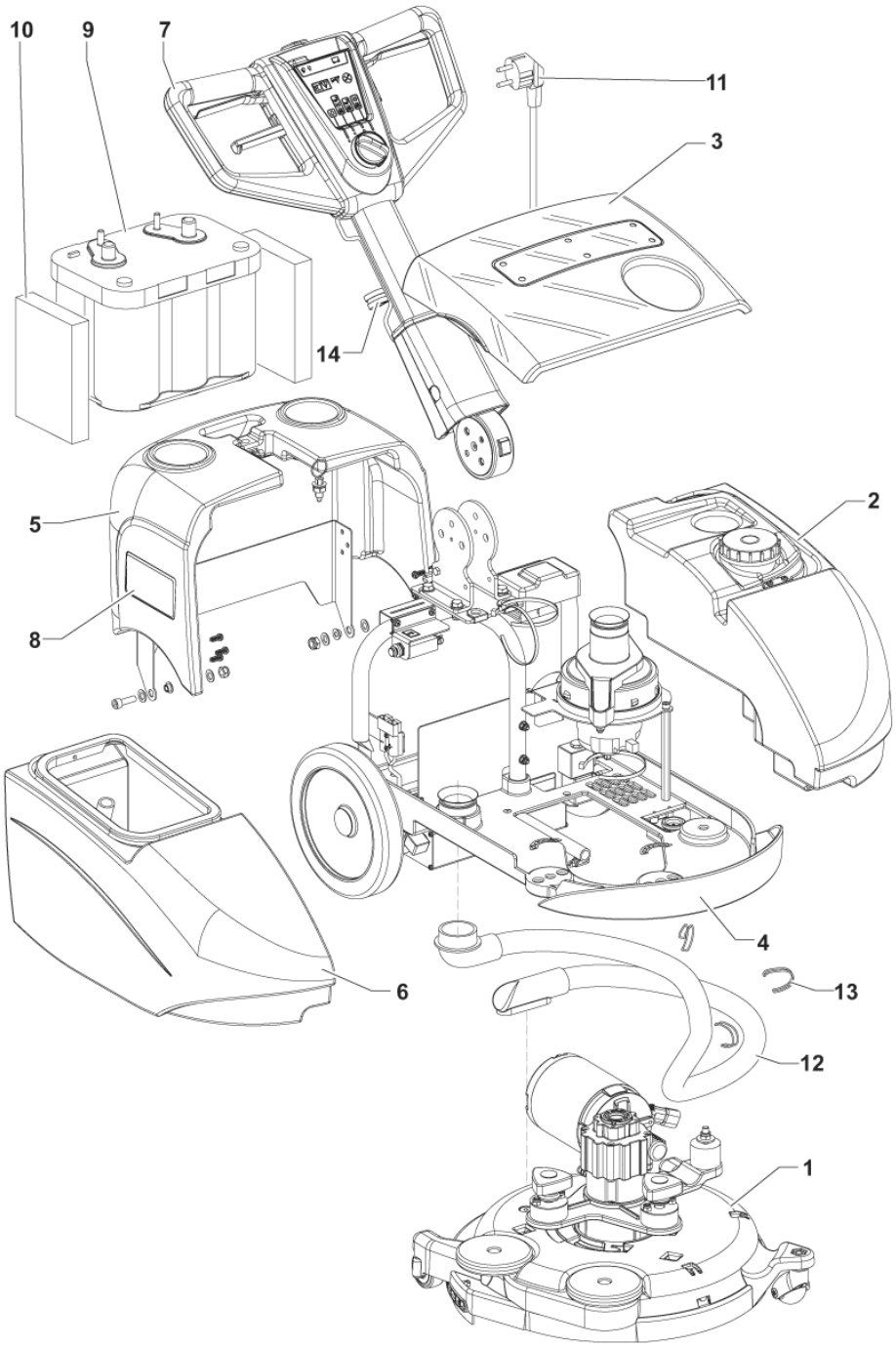
10
9
7
11
3
14
5
2
8
4
6
13
12
1

Pos.	Artikel-Nr.	Menge	Variante	Notes
	9100002948	1	PALLET 880X550MM 5 PCS SET	
1		1	BRUSH DECK	[1]
2		1	SOLUTION TANK	[2]
3		1	COVER TANK	[2]
4		1	FRAME	[3]
5		1	BATTERY COVER	[3]
6		1	RECOVERY TANK	[2]
7		1	HANDLE	[4]
8	9100000079	1	DECALS KIT SC351 NIL	[5]
8	9100000080	1	DECALS KIT SC351 ADV	[6]
9	9100001664	1	BATTERY 12V 55AH AGM SPIRACEL	[7]
9	1464853000	1	Gelbatterie 12V-87 Ah	[8]
10	9098934000	2	PANEL BATTERY FOAM 170X110X30MM	
11	9100000787	1	CABLE EXTENSION EU PLUG L.2000 PKD	[5]
11	1466318000	1	CABLE EXTENSION UK PLUG L.2000MM SIP	[5]
11	9096914000	1	Knickschutz	[6]
11	1467891000	1	CABLE EXTENSION SWISS PLUG L.2000MM SIP	
12	9099706000	1	HOSE SUCTION D.25	
13	9100001733	1	TIE CABLE 2.5x200 BLACK 10 PCS SET	
14	9099301000	1	Schraubenkit Scrubtec 337	

Part Notes:

[1] - BRUSH DECK
[2] - COVER AND TANKS
[3] - FRAME SYSTEM
[4] - HANDLE SYSTEM
[5] - NILFISK VERSION
[6] - ADVANCE VERSION
[7] - ONLY FOR NILFISK
[8] - OPTIONAL FOR NILFISK
STANDARD FOR ADVANCE

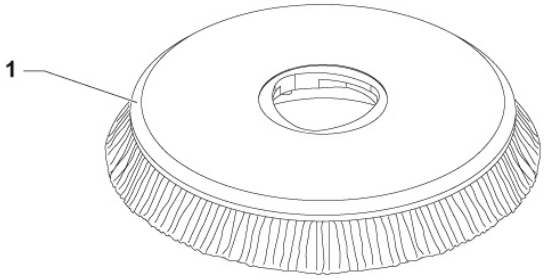
1

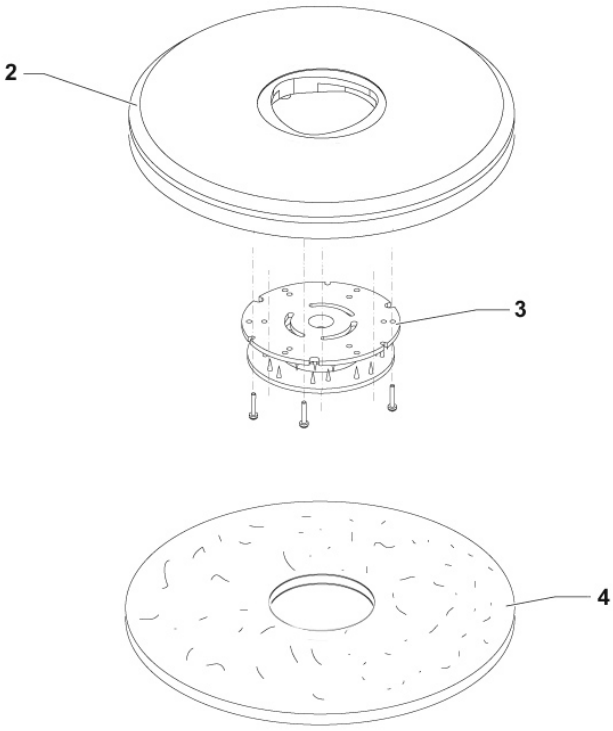
2
3
4

Pos.	Artikel-Nr.	Menge	Variante	Notes
1	9099999000	1	Bürste Prolene, 370 mm, 14,5"	
1	9100000001	1	Bürste Prolite, 370 mm, 14,5"	[1]
1	9100000000	1	Bürste Union Mix, 370 mm, 14,5"	[1]
1	9100000002	1	Bürste Mid Grit, 370 mm, 14,5"	[1]
1	9100000003	1	Bürste Magna Grit, 370 mm, 14,5"	[1]
2	9099672000	1	Padhalter Ø 355 mm, 14"	[1]
3	56505195	1	Padverschluss m. Spange	[1]
4	10001918	1	Eco Pad 14", Ø 355 mm, braun, VPE 5	[1]
4	10001920	1	Eco Pad 14", Ø 355 mm, rot, VPE 5	[1]
4	10001921	1	Eco Pad 14", Ø 355 mm, weiß, VPE 5	[1]
4	10001919	1	Eco Pad 14", Ø 355 mm, grün, VPE 5	[1]

Part Notes:

[1] - OPTIONAL

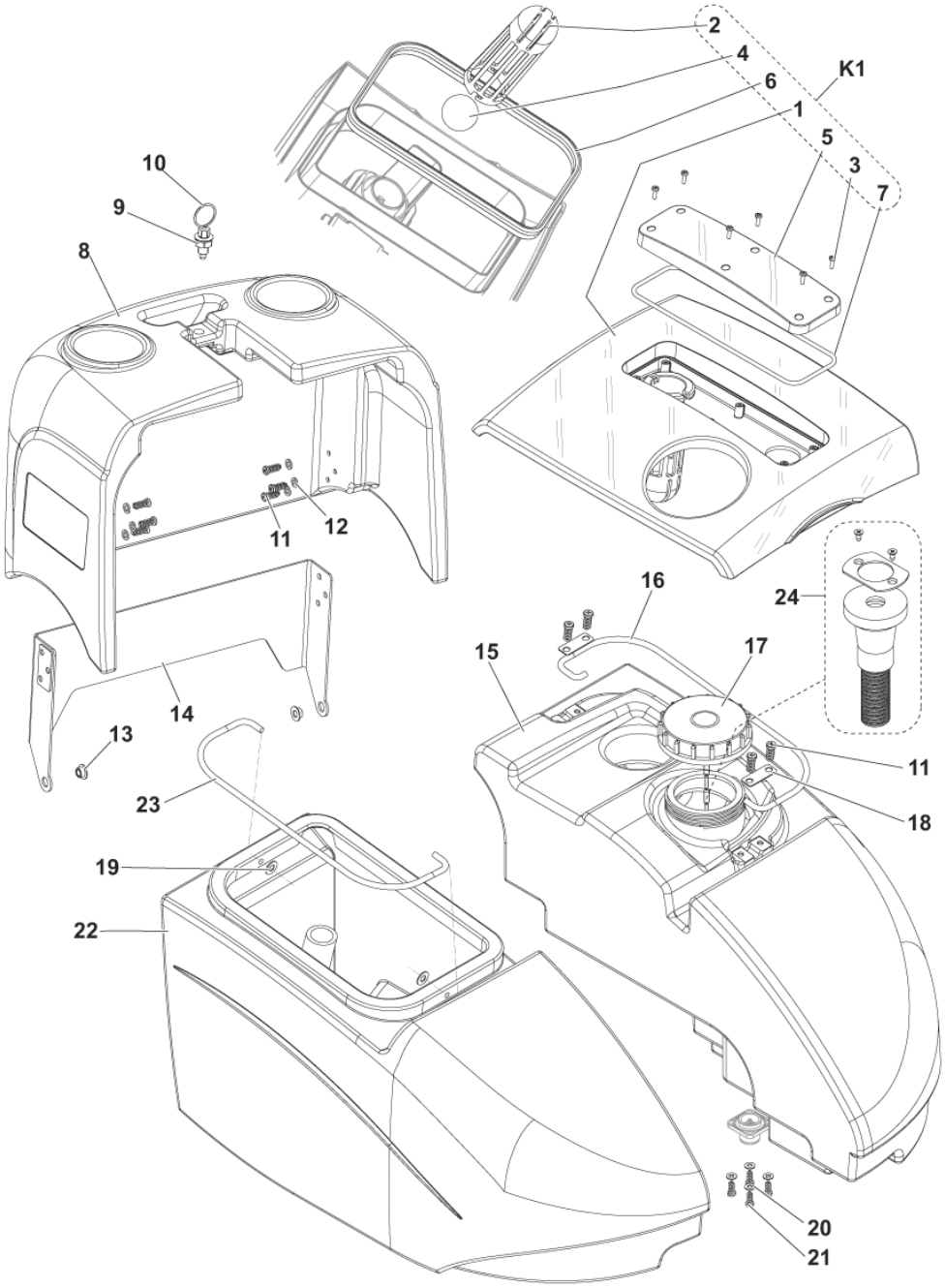
2
4
6
1
K1
5
3
7
10
9
8
11
12
16
24
15
17
14
13
11
23
18
19
22
20
21

Pos.	Artikel-Nr.	Menge	Variante	Notes
2	9100001371	1	CAGE FLOAT PKD	
4	L08092600	1	Ventilball	
6	9099127000	1	GASKET RUBBER L.705MM PKD	
8	9098318000	1	Batterieabdeckung	
9	145 1147 000	1	U-Scheibe	
10	1466331000	1	PLUNGER M10 D.6 W/NUT PKD	
14	9098309000	1	SUPPORT BATTERY COVER METAL	
15	9098149000	1	TANK SOLUTION RAL 7001	
16	9100000104	1	HANDLE SOLUTION TANK	
17	9100001202	1	CAP THREADED 70X5 PKD	
18	9098621000	2	PLATE HANDLE TANK	
19	9098473000	2	COVER PIN	
22	9098148000	1	TANK RECOVERY RAL7001	
23	9100000103	1	HANDLE RECOVERY TANK	
24	9099011000	1	Befüllschlauch	[1]
K1	9100002110	1	Kit Gehäuse-Abdeckung	
K2	9098990000	1	Deckelbefestigung	[2]

Part Notes:

[1] - OPTIONAL - SEE TSB-FC-2016-020
[2] - NOT SHOWN

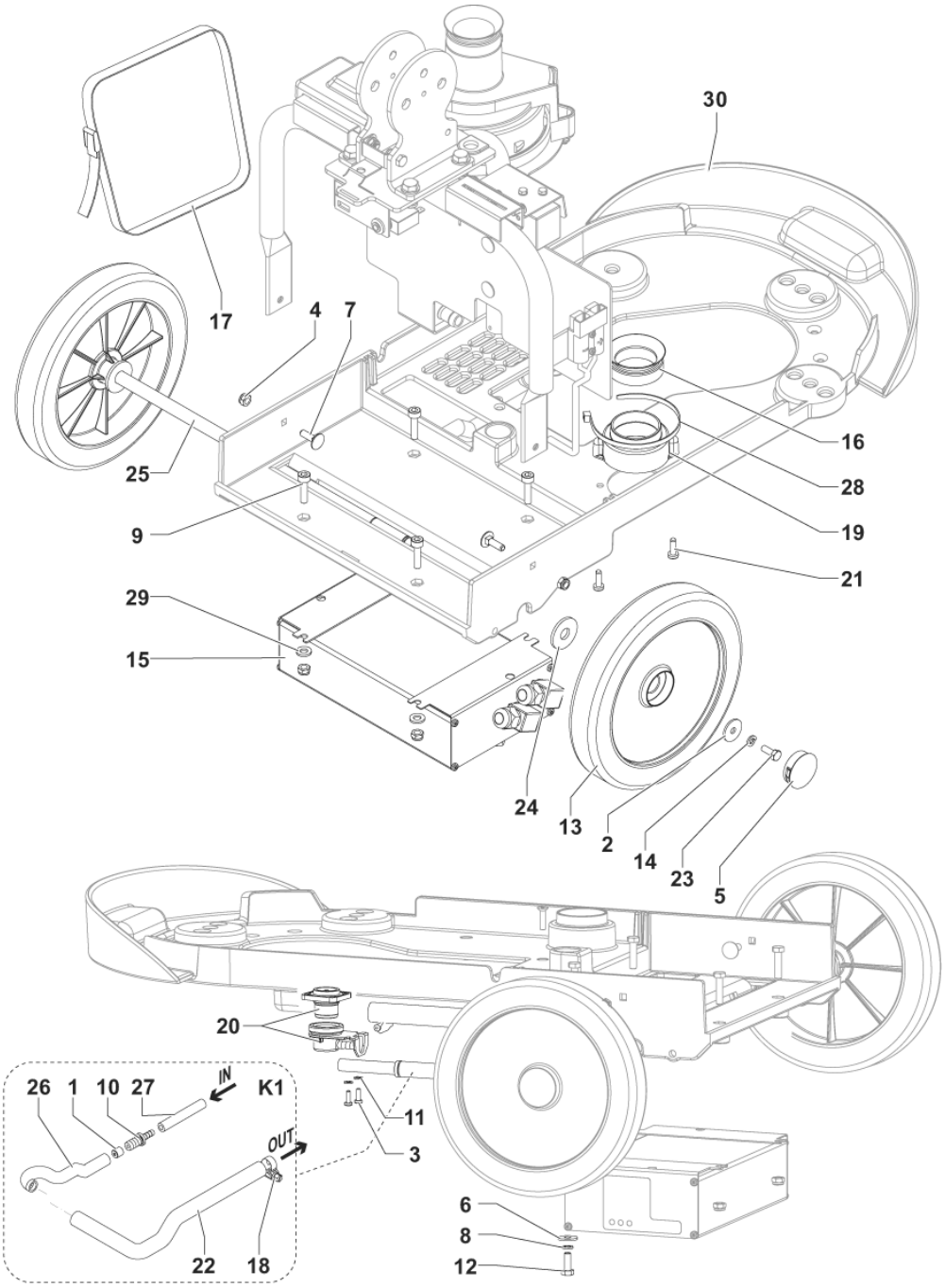
30
17
4
7
16
28
25
19
9
21
29
15
24
13
2
14
23
5
20
26
1
10
27
IN
K1
OUT
11
3
6
8
12
22
18

Pos.	Artikel-Nr.	Menge	Variante	Notes
13	9099732000	2	RAD D.214 GRAU/SCHWARZ	
15	9100000713	1	Einbauladegerät 12V-15A 230V	[1]
15	9100002104	1	CHARGER BATT. O/B 12V 12A 100-230V JP	[2]
15	9100002103	1	CHARGER BATT. O/B 12V 12A 100-230V US	[3]
16	9100001958	1	GASKET PKD	
17	1467834000	1	BELT BATTERY FIXING	
19	9099719000	1	SUPPORT FOR GASKET	
20	9100000514	1	Kit Wasserventil	
25	9100002588	1	SHAFT WHEELS SS KIT	
30	9099927000	1	RAHMEN KOMPLETT	
K1	9098992000	1	Rohrleitungskit	[4]
K1	9100000476	1	HOSES SOLENOID VALVE 12V KIT	[5]
K2	9100000083	1	HARDWARE CHASSIS KIT	[6]

Part Notes:

[1] - NILFISK VERSION - INST.INSTR. 9100000712- SEE TSB-FC-2014-042
[2] - NILFISK VERSION
[3] - ADVANCE VERSION
[4] - UNTIL SN 3510145009117
[5] - STARTING SN 3510145009118
[6] - NOT SHOWN

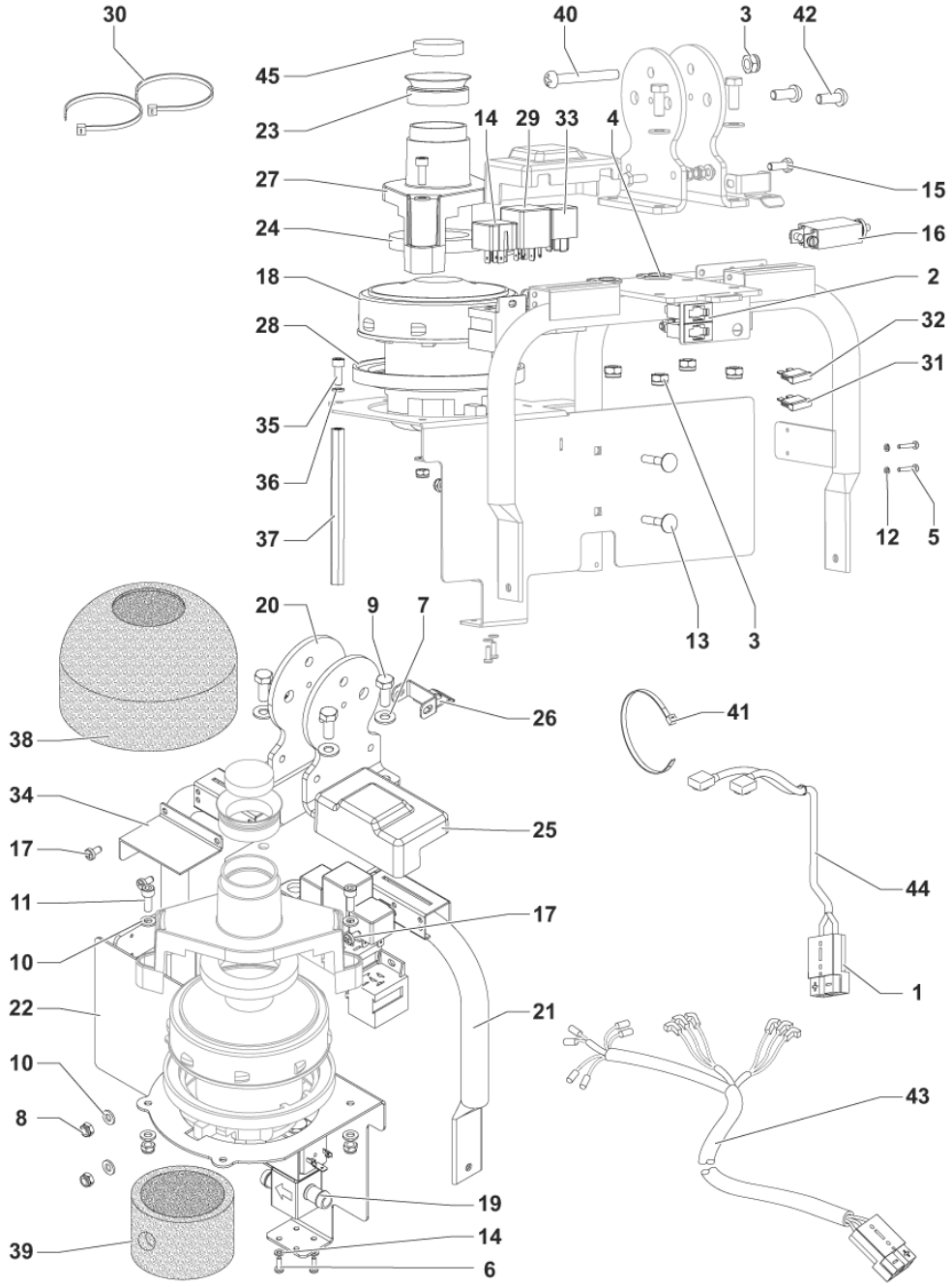
30
40
3
42
45
23
14
29
33
4
27
15
24
16
18
2
28
32
31
35
36
37
12
5
20
9
7
13
3
26
41
38
34
25
17
44
11
17
10
1
22
21
10
43
8
19
14
39
6

Pos.	Artikel-Nr.	Menge	Variante	Notes
1	9098760000	2	CONNECTOR 50A GREY	
2	9098924000	2	FUSE HOLDER	
4	909 6542 000	2	Abdichtung Kabel	
14	9098441000	1	Relais 12V	
16	9099802000	1	CIRCUIT BREAKER 35A KIT	
18	9100001238	1	SAUGMOTOR 12V 200W PKD	
19	9098112000	1	Magnetventil 12V	[1]
19	9100000475	1	SOLENOID VALVE 12V PKD	[2]
20	9098185000	2	BRACKET HANDLE	
21	9100001411	1	SUPPORT HANDLE SIP	
22	9100002355	1	SUPPORT VACUUM MOTOR SIP	
23	9100001958	1	GASKET PKD	
24	9098327000	1	Abdichtung Saugmotor	
25	9098365000	1	COVER RELAY	
26	9098482000	1	BRACKET PLUNGER BLOCK	
27	9098483000	1	COVER VACUUM MOTOR	
28	9098554000	1	GASKET VACUUM MOTOR	
29	9098375000	1	Timer	
31	145 8513 000	1	FUSE BLADE 30A UL	
32	145 9852 000	1	FUSE BLADE 5A UL	
33	146 3113 000	1	Relais 12V/70Ah	
34	9099731000	1	SUPPORT CIRCUIT BRAKER	
37	9098559000	1	SPACER GALV. F SUPPORT VAC. MOTOR	
38	9098656000	1	Schuzthülle f. Motor	
39	9098925000	1	CASING LOWER VACUUM MOTOR	
43	9099330000	1	HARNESS MACHINE	[3]
43	9100000477	1	HARNESS MACHINE SIP	[4]
43	L08603885	1	CONNECTOR TYPE DIN 46340	[4]
44	9098849000	1	HARNESS BATTERY	
45	9100001278	1	Filter für Saugmotor	
K1	9100000084	1	SCHRAUBENSATZ HALTERUNG GRIFF	[5]

Part Notes:

[1] - UNTIL SN 3510145009117
[2] - SOLENOID VALVE W/ HOSE - STARTING FROM SN 3510145009118
[3] - NO LONGER AVAILABLE

UNTIL SN 3510145009117
[4] - STARTING SN 3510145009118
[5] - NOT SHOWN

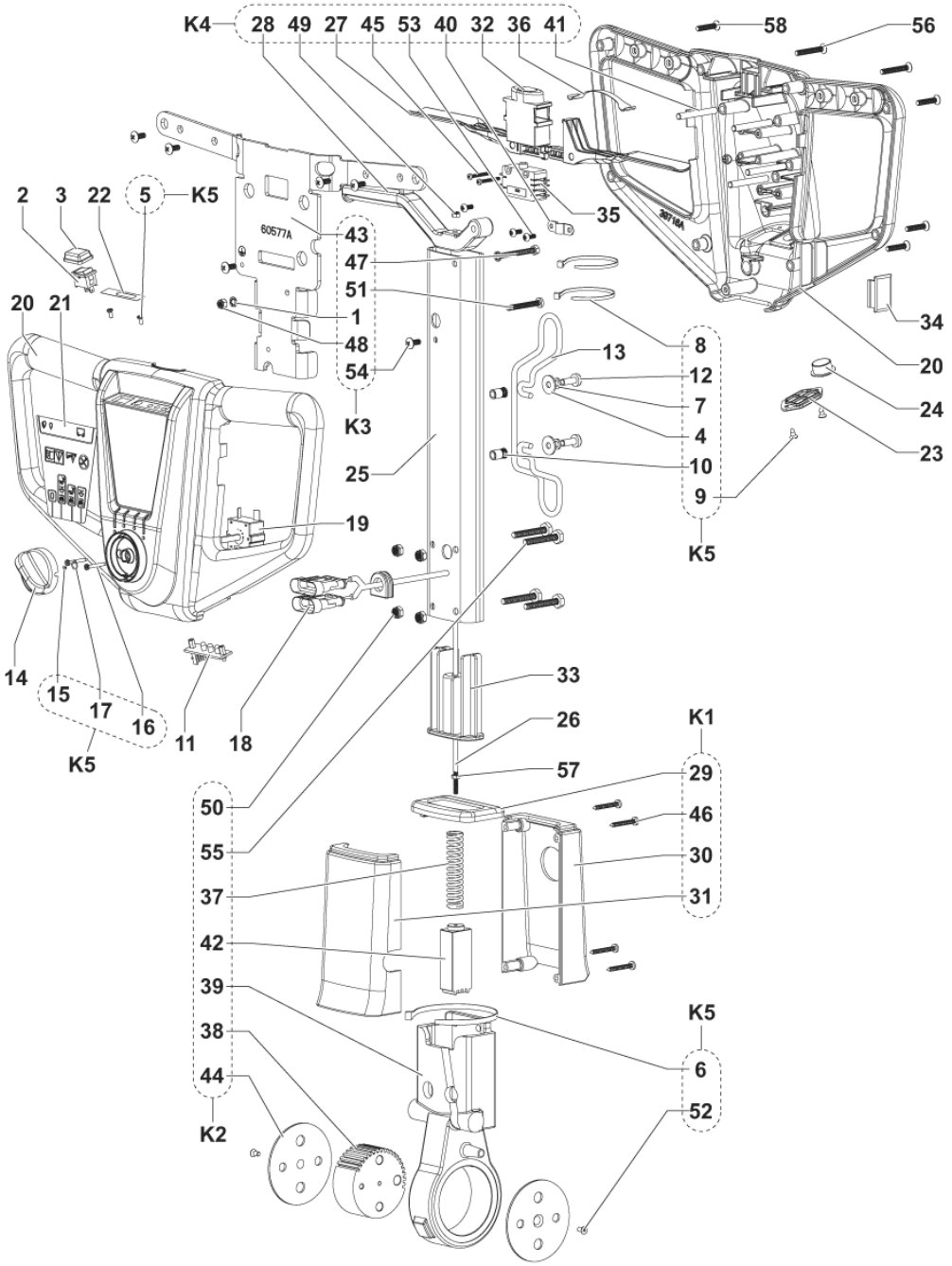
K4
28 49 27 45 53 40 32 36 41
58
56
2 3 22 5 K5
35
43
47
51
1
48
54
K3
20 21
13
8
12
7
4
10
9
K5
34
20
24
23
25
19
14
15
17
16
K5
11
18
33
26
K1
57
29
46
30
31
50
55
37
42
39
38
44
K2
K5
6
52

Pos.	Artikel-Nr.	Menge	Variante	Notes
2	L08603153	1	Kippschalter	[1]
3	L08603154	1	SCHUTZKAPPE	
11	146 3073 000	1	BOARD LED	
13	1466317000	1	SUPPORT CABLE KIT	
14	9097283000	1	KNOB CONTROL FUNCTIONS	
18	9099331000	1	FÜHRUNGSKABEL	
19	9099332000	1	SWITCH ROTATIVE 4 POSITIONS	
20	9100000101	1	COVERS HANDLE GREY KIT	
21	9099733000	1	DECAL CONTROL PANEL	
22	9098616000	1	Sticker Batterie LED	[1]
23	9098812000	1	CAP FOR HANDLE	
24	9098813000	1	CAP D.18.5/D.24MM BLACK	
25	9098835000	1	TUBE OF HANDLE	
26	9098836000	1	ROD INDEX	
33	VF47033	1	RETAINER	
34	VF54041	1	HANDLE PLUG	
35	40263A	1	SWITCH DPST	
56	80398A	2	SCREW M5X35 SS HEAD PHILLIPS	
57	VV13609	1	NUT M4	
58	80407A	4	SCREW M5X25 SS FLAT HEAD PHILLIPS	
K1	11271A	1	Abdeckungskit	
K2	11272A	1	LOWER HOUSING KIT	
K3	11273A	1	Befestigungskit für Griff	
K4	11274A	1	HANDLE SWITCH LEVER KIT	
K5	9098995000	1	HARDWARE HANDLE BAR KIT	

Part Notes:

[1] - STOCK COVERS GUARANTEE

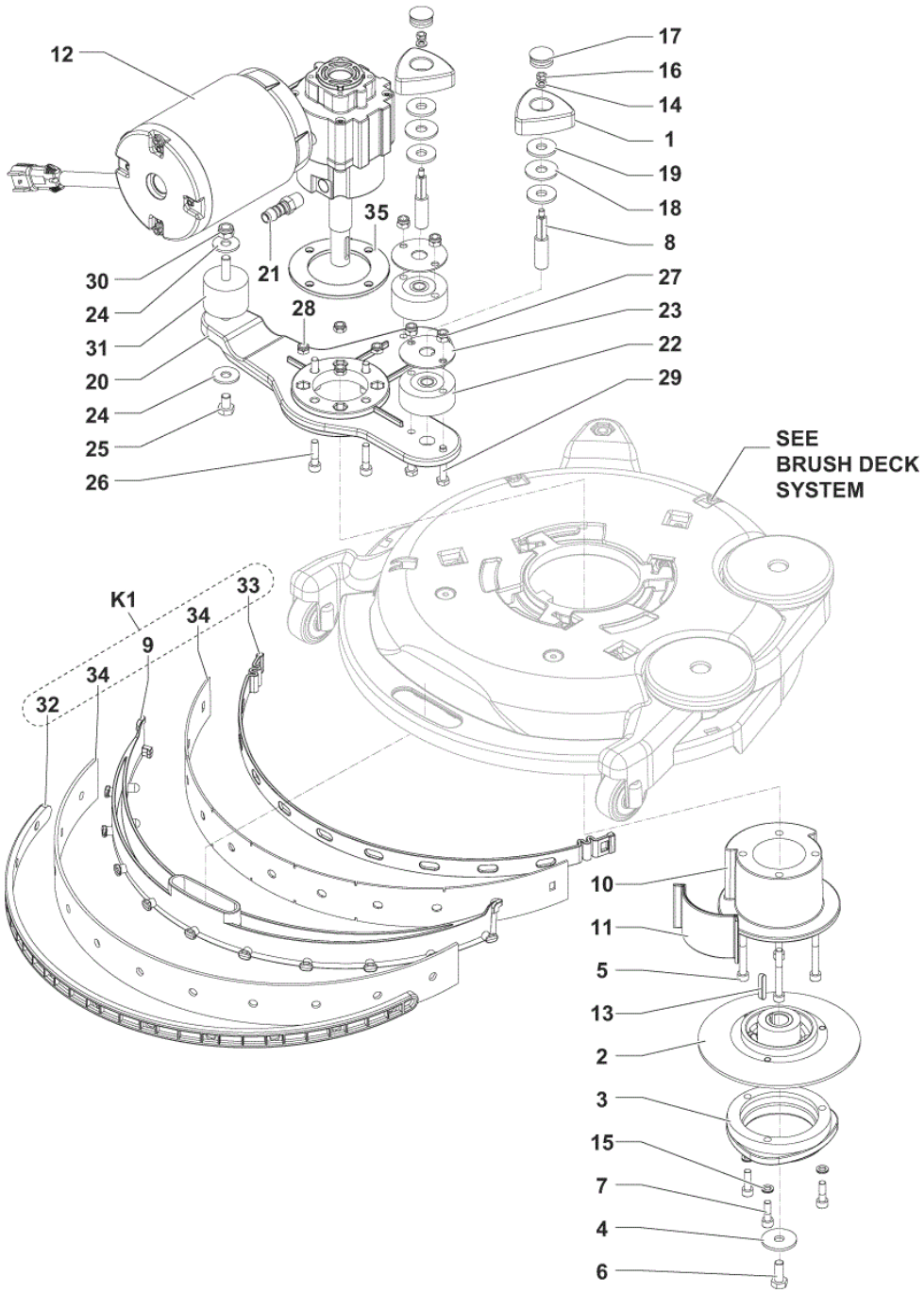
12
17
16
14
1
19
18
8
35
21
30
24
31
20
24
25
26
28
27
23
22
29
SEE
BRUSH DECK
SYSTEM
K1
33
34
9
34
32
10
11
5
13
2
3
15
7
4
6

Pos.	Artikel-Nr.	Menge	Variante	Notes
1	L08812203	2	Rändelmutter zu BA 530	
2	L08812306	1	Bürstenbüchse zu Getriebe	
3	L08812480	1	Polygonaufnahme	
8	9098557000	2	PIN BRUSH PLATE FIXING	
10	9100000955	1	FLANGE DECK KIT	
11	9099736000	1	SPACER LIMIT	
12	9100000679	1	Getriebemotor 260W 12V PKD	
13	1466146000	1	KEY 5X5X25 UNI6604A PKD	
17	L08812426	2	Deckel klein zu BA 530	
20	9099718000	1	SUPPORT DECK	
21	L08601624	1	Schlauchnippel 1/4 x 10	[1]
21	9100000478	1	HOLDER RUBBER STRAIGHT 1/4 D.6 SIP	[2]
22	L08812213	2	Distanzstück zu BA 530	
23	L08812779	2	Stahlplattendeckel	
31	9100000868	1	VIBRATION DAMPING M8 60SH 2 PCS SET	
32	9099707000	1	ELASTISCHES BAND HINTEN	
33	9099708000	1	ELASTISCHES BAND VORN	
34	9100000077	1	Sauglippen-Set PU 370 mm, 14,5"	
34	9100000302	1	Sauglippen-Set Gummi, 370 mm, 14,5"	[3]
K1	9100000085	1	SQUEEGEE 438MM/17 KIT	
K2	9100000086	1	Dichtungssatz Motordeck	[4]

Part Notes:

[1] - UNTIL SN 3510145009117
[2] - STARTING SN 3510145009118
[3] - OPTIONAL
[4] - NOT SHOWN

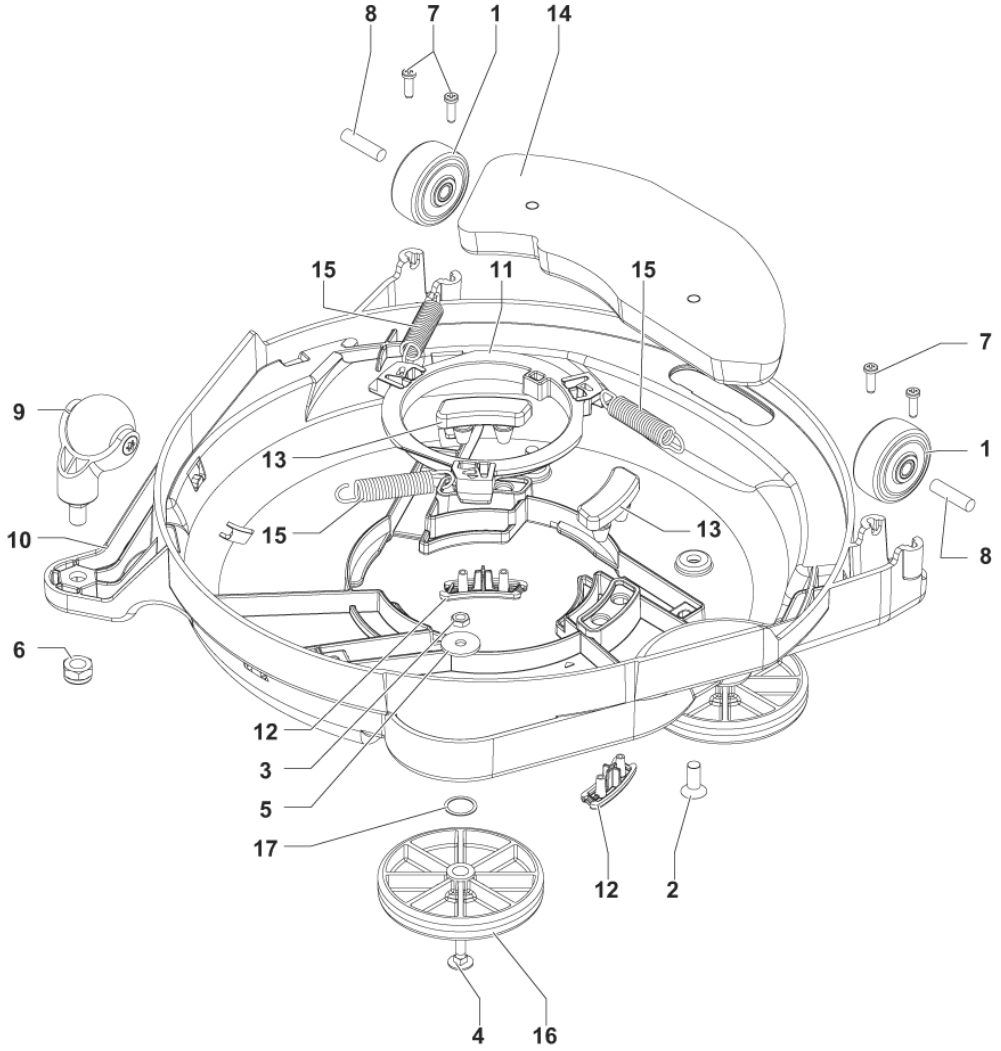
8
7
1
14
15
11
15
7
9
1
13
10
15
13
8
6
12
3
5
17
12
2
4
16

Pos.	Artikel-Nr.	Menge	Variante	Notes
1	9100000559	2	Rad grau D.51	
9	9099163000	1	Lenkrolle D42	
10	9099712000	1	DECK BRUSH 350MM/14	
11	9099713000	1	FLANGE CENTRAL	
14	9100002162	1	COUNTERWEIGHT SIP	
15	9099720000	3	SPRING TRACTION	
16	9100001816	1	WHEEL BUMPER D.100 PLASTIC 2 PCS SET	
K1	9100000087	1	Kupplungskit	[1]
K2	9100000088	1	Schraubenset für Rad	[1]

Part Notes:

[1] - NOT SHOWN

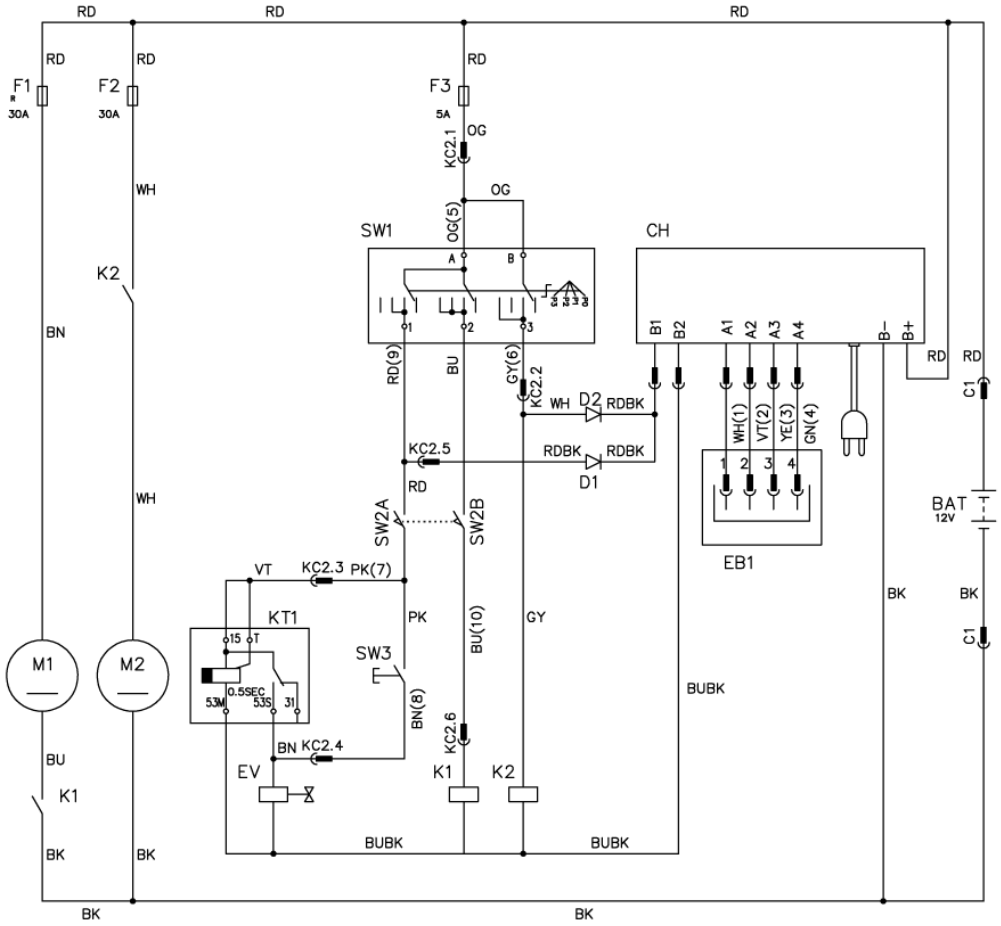
RD
F1
30A
F2
30A
F3
5A
KC2.1
OG
WH
K2
BN
SW1
OG(5)
CH
B1
B2
A1
A2
A3
A4
B-
B+
RD(9)
BU
GY(6)
KC2.2
D2
RDBK
D1
KC2.5
WH(1)
VT(2)
YE(3)
GN(4)
EB1
C1
BAT
12V
SW2A
SW2B
VT
KC2.3
PK(7)
KT1
PK
BU(10)
GY
SW3
BN(8)
KC2.6
BUBK
BK
M1
M2
BU
K1
BN
KC2.4
EV

Pos.	Artikel-Nr.	Menge	Variante	Notes
BAT	9100001664		BATTERY 12V 55AH AGM SPIRACEL	
CH	9100000713		Einbauladegerät 12V-15A 230V	
CH	9100002103		CHARGER BATT. O/B 12V 12A 100-230V US	
EB1	146 3073 000		BOARD LED	
EV	9098112000		Magnetventil 12V	
F1	9099802000		CIRCUIT BREAKER 35A KIT	
F2	145 8513 000		FUSE BLADE 30A UL	
F3	145 9852 000		FUSE BLADE 5A UL	
K1	146 3113 000		Relais 12V/70Ah	
K2	9098441000		Relais 12V	
KT1	9098375000		Timer	
M1	9100000679		Getriebemotor 260W 12V PKD	
M2	9100001238		SAUGMOTOR 12V 200W PKD	
SW1	9099332000		SWITCH ROTATIVE 4 POSITIONS	
SW2	40263A		SWITCH DPST	
SW3	L08603153		Kippschalter	[1]

Part Notes:

[1] - STOCK COVERS GUARANTEE

Pos.	Artikel-Nr.	Menge	Variante	Notes
NW	9100000077	1	Sauglippen-Set PU 370 mm, 14,5"	
NW	9099999000	1	Bürste Prolene, 370 mm, 14,5"	
OM	9099707000	1	ELASTISCHES BAND HINTEN	
OM	9099708000	1	ELASTISCHES BAND VORN	
OM	9099127000	1	GASKET RUBBER L.705MM PKD	
OM	9100001958	2	GASKET PKD	
OM	9100001238	1	SAUGMOTOR 12V 200W PKD	
OM	9098327000	1	Abdichtung Saugmotor	
OM	9100000679	1	Getriebemotor 260W 12V PKD	
OM	L08812480	1	Polygonaufnahme	
OM	9099706000	1	HOSE SUCTION D.25	
OM	9100000559	2	Rad grau D.51	
OM	9099163000	1	Lenkrolle D42	
OM	9100000087	1	Kupplungskit	
OM	9100000085	1	SQUEEGEE 438MM/17 KIT	
EOM	9099712000	1	DECK BRUSH 350MM/14	
EOM	9100001816	1	WHEEL BUMPER D.100 PLASTIC 2 PCS SET	
EOM	9099732000	2	RAD D.214 GRAU/SCHWARZ	
EOM	9100000713	1	Einbauladegerät 12V-15A 230V	
EOM	9100002103	1	CHARGER BATT. O/B 12V 12A 100-230V US	
EOM	9100000514	1	Kit Wasserventil	
EOM	9098992000	1	Rohrleitungskit	
EOM	9098760000	2	CONNECTOR 50A GREY	
EOM	9099802000	1	CIRCUIT BREAKER 35A KIT	
EOM	9098112000	1	Magnetventil 12V	
EOM	146 3113 000	1	Relais 12V/70Ah	
EOM	9098441000	1	Relais 12V	
EOM	9098375000	1	Timer	
EOM	145 8513 000	1	FUSE BLADE 30A UL	
EOM	145 9852 000	1	FUSE BLADE 5A UL	
EOM	9099332000	1	SWITCH ROTATIVE 4 POSITIONS	
EOM	40263A	1	SWITCH DPST	
EOM	L08603153	1	Kippschalter	[1]

Part Notes:

[1] - STOCK COVERS GUARANTEE

Pos.	Artikel-Nr.	Menge	Variante	Notes
	1464853000	1	Gelbatterie 12V-87 Ah	
	9099011000	1	Befüllschlauch	[1]
	9100000001	1	Bürste Prolite, 370 mm, 14,5"	
	9100000000	1	Bürste Union Mix, 370 mm, 14,5"	
	9100000002	1	Bürste Mid Grit, 370 mm, 14,5"	
	9100000003	1	Bürste Magna Grit, 370 mm, 14,5"	
	9099672000	1	Padhalter Ø 355 mm, 14"	
	10001918	1	Eco Pad 14", Ø 355 mm, braun, VPE 5	
	10001920	1	Eco Pad 14", Ø 355 mm, rot, VPE 5	
	10001921	1	Eco Pad 14", Ø 355 mm, weiß, VPE 5	
	10001919	1	Eco Pad 14", Ø 355 mm, grün, VPE 5	
	9100000302	1	Sauglippen-Set Gummi, 370 mm, 14,5"	

Part Notes:

[1] - SEE TSB-FC-2016-020

© 2020 - Nilfisk A/S